Overview

iRack Series, a Self Cooled, Self Powered & Self Contained Rack

Trend towards having Intelligent Infra Capsules on Premises at Banking & Insurance Sector, Warehouses, Manufacturing sector & Educational Institutions made the Rack manufactures to think on concept of iRack. Thanks to Technology, which made the concept a reality today

The Racks manufactured out of steel sheet punched, formed, welded and powder coated with highest quality standards under stringent ISO 9001-2008 Manufacturing & Quality management system to ensure highest quality product.

Standard for Racks configuration will be welded ultra rigid frame with 4 No. Pillars of 14 Gauge steel sheet 6 folded profile welded to top and bottom ribbed /reinforced frame additionally supported depth wise by welding 6 No. depth rail 4 folded 75mm 16 Gauge profile. Front Glass door with lock & key and Back Metal door with lock & key and Plain dual side panels. Free standing on plinth.

To Complete intelligence in iRack NetRack integrate 3.5Kw PAC Unit,with and without redundancy, UPS with Battery bank, Intelligent PDU for Power, Surveillance & environmental management, KVM & Console for server management, Intelligent Rack access for physical security will complete full fledged iRack Configuration..

iRack equipped with Air-seal Kit,Blanking panels, Brush models and panels for complete Airflow management.

Available in 42RU Variants with 1200 Depth Configurations and 600 & 800 Width Configurations.

NETRACK ENCLOSURES
STORE | SECURE | STREAMLINE | SYSTEMISE

iRack Airflow Management

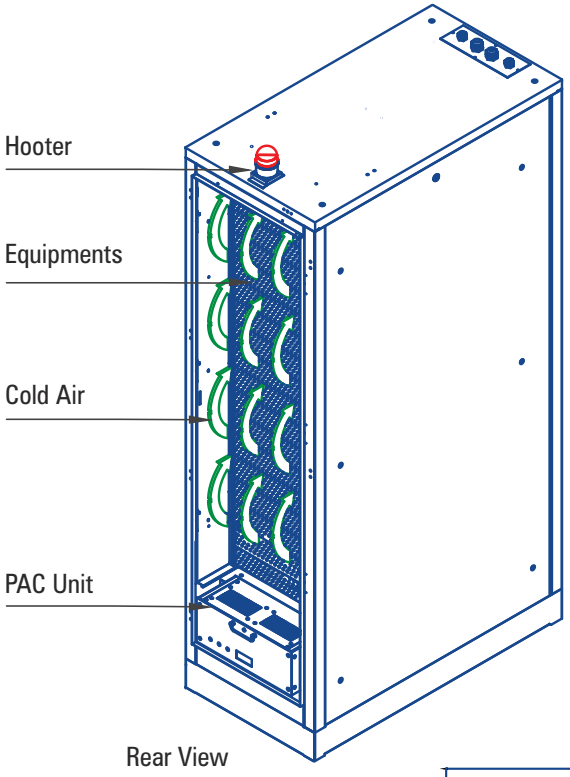

Rear View

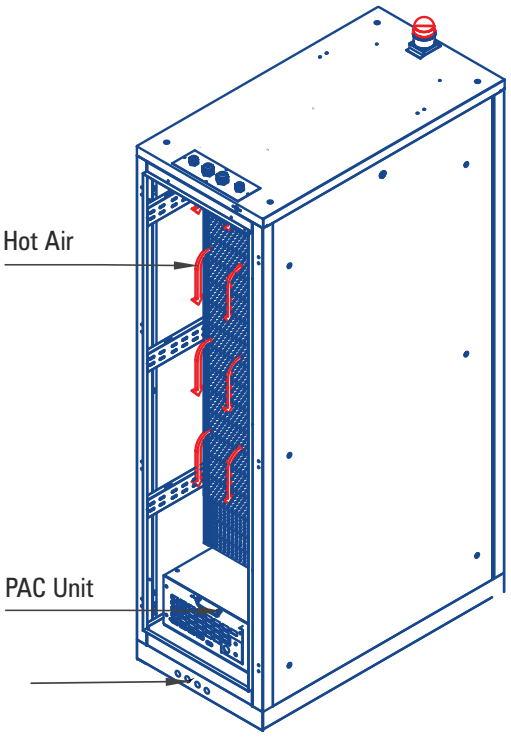

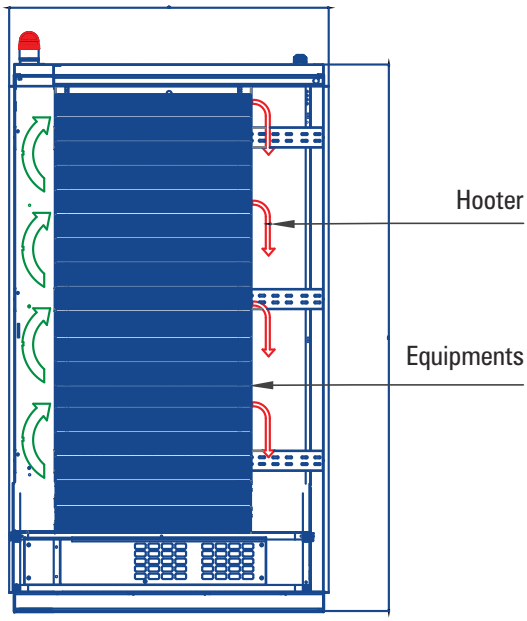

1. Completely Contained
2. IP 50 for Dust Protection
3. Air-Seal Kit & Blank Panel for Airflow Management
4. Gland Module for IP 50 Cable Entry & Exit
5. 3.25 Kw / PAC Unit

iRack IDU to ODU Piping diagram with and without redundancy

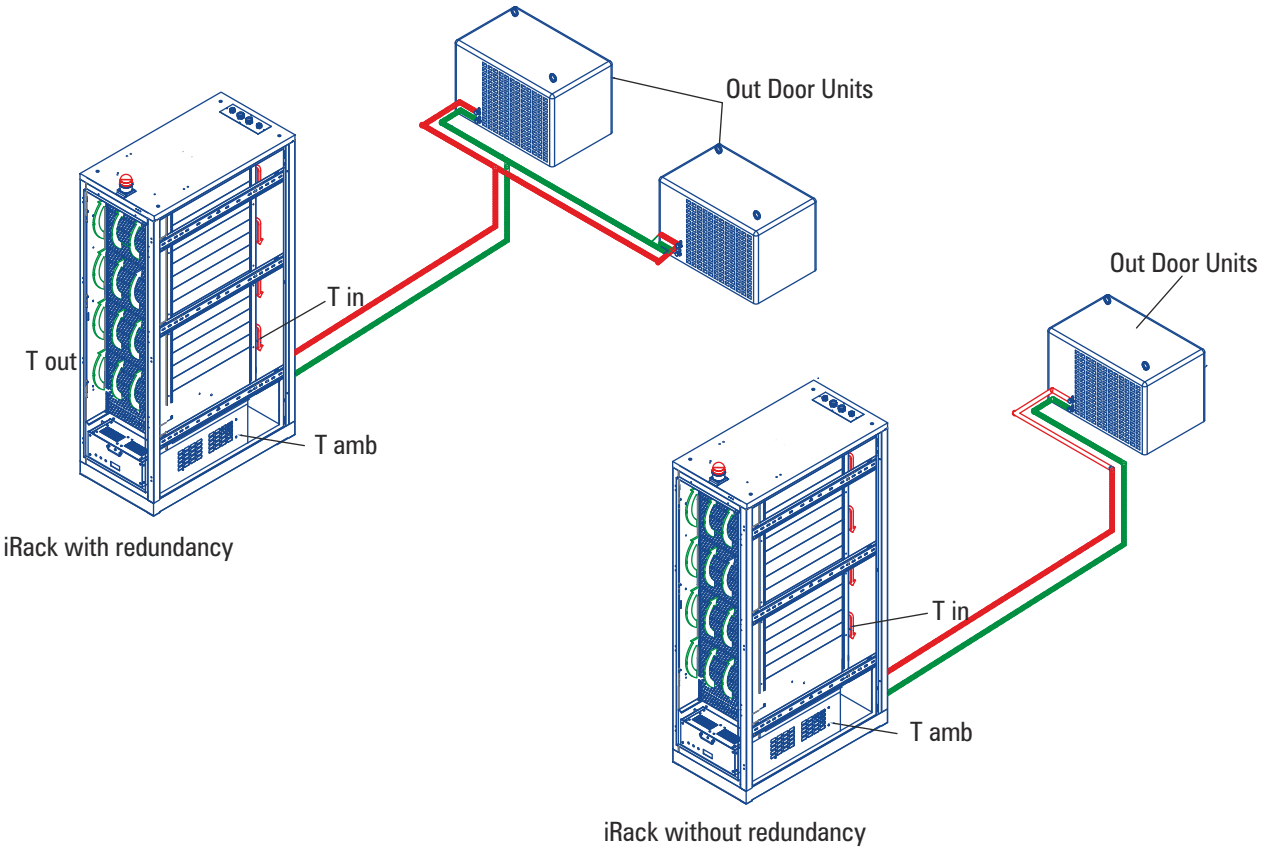

iRack Series Configurator Drawing with Critical Parts

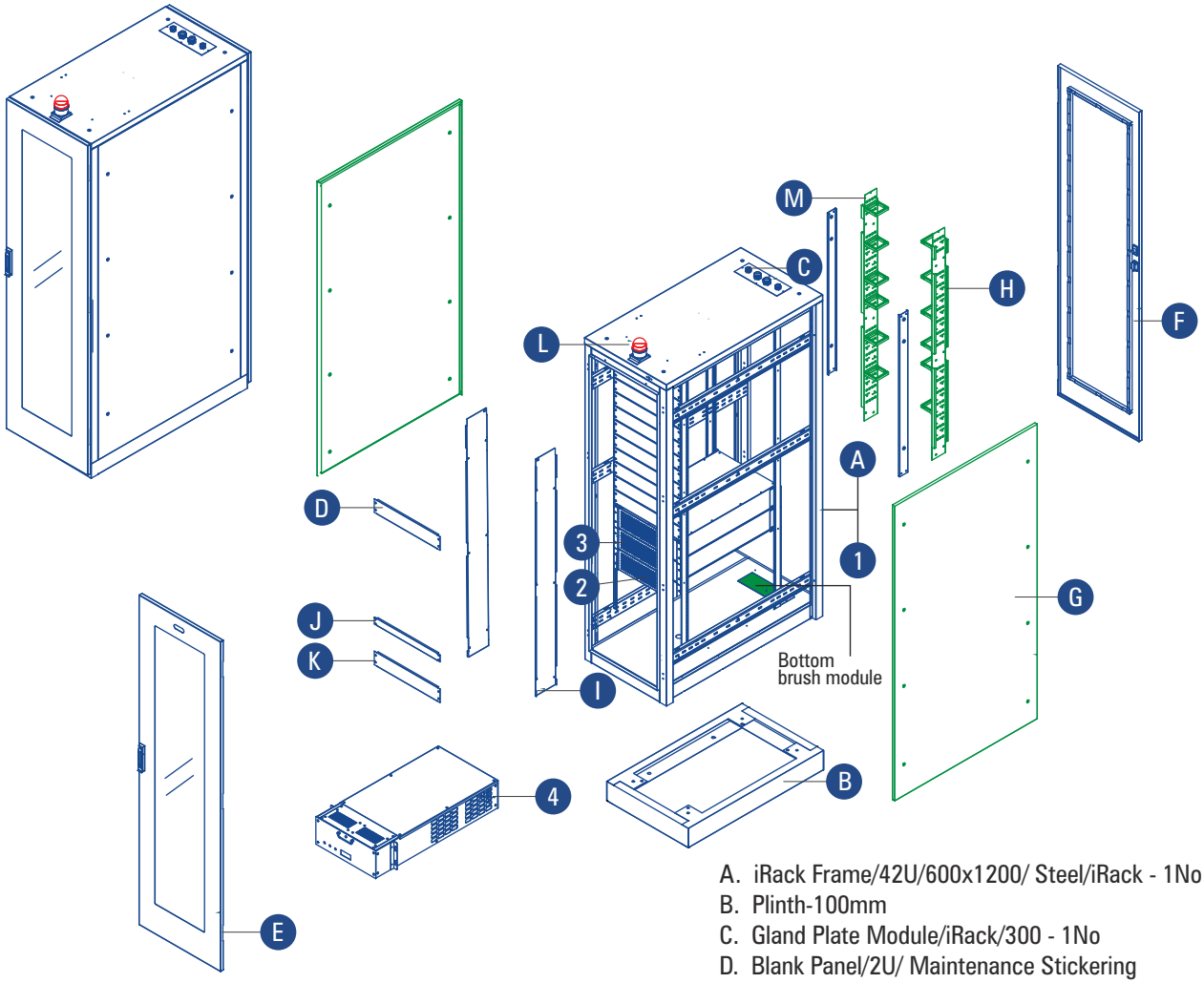

1. iRACK/42U /600X1200/IT COMPONENTS
2. iRack UPS Unit / 3KVA /10 Min Back Up/2U
3. iRack Extended Battery Module/3KVA /20min/2U
4. iRack Ac/ Horizontal/ 3.5KW/4U

A. iRack Frame/42U/600x1200/ Steel/iRack - 1No
B. Plinth-100mm
C. Gland Plate Module/iRack/300 - 1No
D. Blank Panel/2U/ Maintenance Stickering
E. Glass Door/600/42U/iRack- 1No
F. Metal Door/600/42U/iRack - 1No
G. Side Panels/1200/42U/iRack - 2No
H. Universal Cable Basket/42U/100 - 2No
I. Air Seal Kit/42U - 1set
J. Blank Panel/1U - 5No (optional)
K. Blank Panel/2U - 5No
L. Light/ Hooter 1No
M. Pdu Mounting Channel

Features

- Precision Cooling unit
- UPS & Battery Bank
- Intelligent PDU for Power
- Surveillance & environmental management
- KVM & Console for server management
- Intelligent Rack Access for physical security
- STS for Power redundancy
- Alert /alarm in the event of temp high or low
- Rack carefully designed and configured as self contained with minimal cold air losses and thermal short circuit

Note: For cable entry / exit refer page No 31

Specifications	
Rack Load Capacity	1000 KG
Rack U Space	30 U
Rack Dimension	2100X600x1200
Cooling Capacity	3.5 KW
UPS Capacity	3KVA
UPS Back Up	30/60 Min
Rack Access Control	Available
Camera Based Surveillance	Available
Intelligent PDU	Available
Intelligent Climate Monitoring	Available
Analogue / Digital KVM	Available
Intelligent Asset Management	Available

Model Matrix & Dimensions

iRack Series	H	h	W	w	D	d	Plinth
42U 600X1200	2010	42U	600	19"	1200	1100	Integrated to Frame
42U 800X1200	2010	42U	800	19"	1200	1100	Integrated to Frame

Note :
1. Overall Height = Frame Height+Plinth
2. It is recommended to distribute the Load along with U space in the Rack
3. Dimension are in MM

Abbreviations
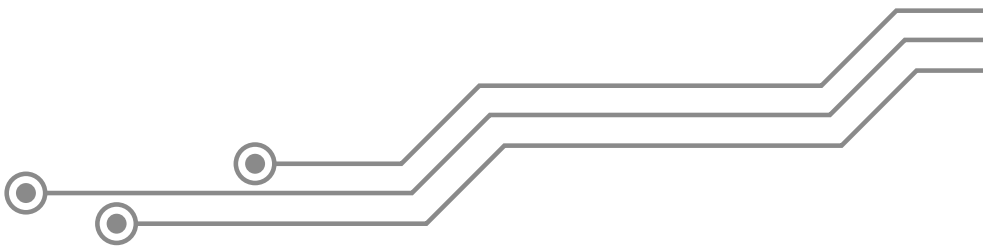
H - Frame height h - Usable height W - Overall width w - Usable width D - Overall depth d - Usable depth