Overview

HCO Specially designed to meet the horizontal cable management challenges of low, Medium & High density application.

Channel type Cable Organizer manufactured out of rigid PVC with punched side slots for cable entry/exit fixed on steel sheet punched back panel and loop type will have ABS loops fixed on steel sheet punched back panel with highest quality standards under stringent ISO 9001-2008 Manufacturing & Quality management system to ensure highest quality product.

Standard configuration will be 1RU & 2RU with cover on front or Front & Back and Back panel for mounting on rack. Loop type cable organizer will have ABS 4 No. Loops for cable management.

Horizontal Cable Organizer/1U/Loop

Horizontal Cable Organizer/1U/Chanel on Front

Horizontal Cable Organizer/1U/Chanel on Front & Back

Horizontal Cable Organizer/2U/Chanel on Front

Horizontal Cable Organizer/2U/Chanel on Front & Back

NETRACK ENCLOSURES
STORE | SECURE | STREAMLINE | SYSTEMISE

Horizontal Cable Organizers

Model Matrix & Dimensions
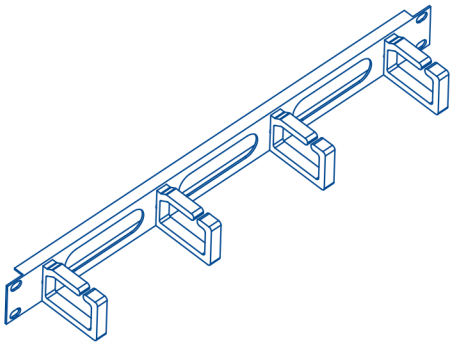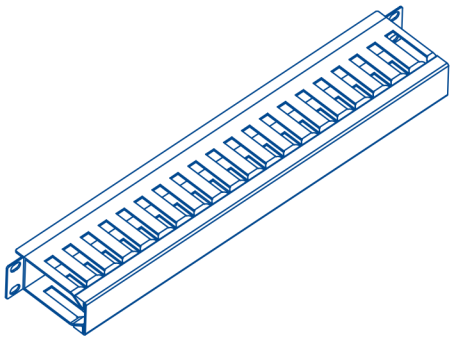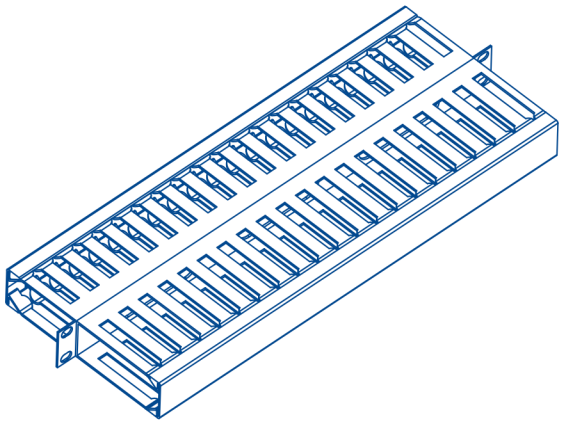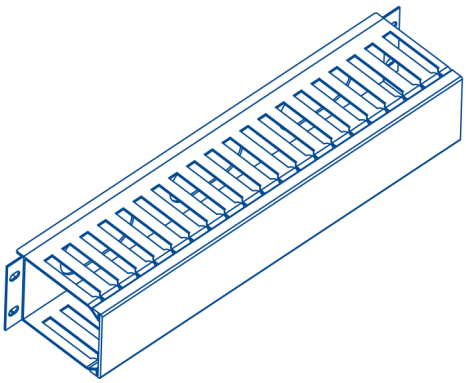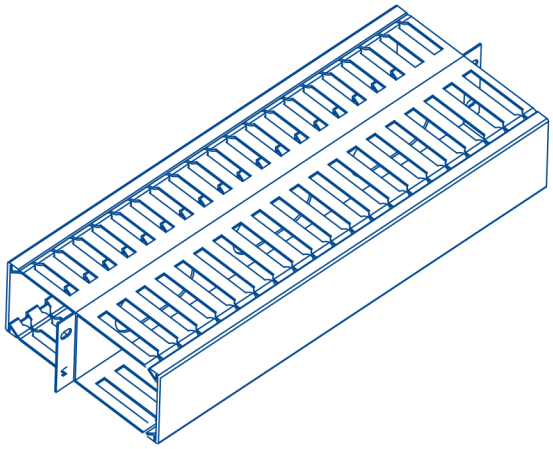
Description	Part No.
Horz. Cable Organizer/1U/ Channel On Front	HCO-1-CF
Horz. Cable Organizer/2U/Channel On Front	HCO-2-CF
Horz. Cable Organizer/1U/Channel On Front & Back	HCO-1-CFB
Horz. Cable Organizer/2U/Channel On Front & Back	HCO-2-CFB
Cable Loops 90x85	SPL