Overview

NetRack offers a range of Ball / Bush Bearing fans and fan modules to suite customer requirement and site conditions.

These Fans can be fixed for exhaust or suction based on requirement.

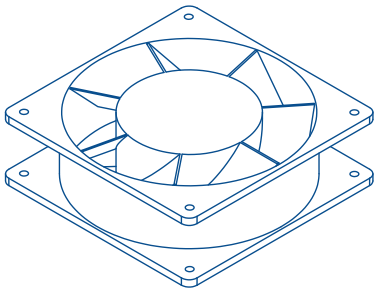

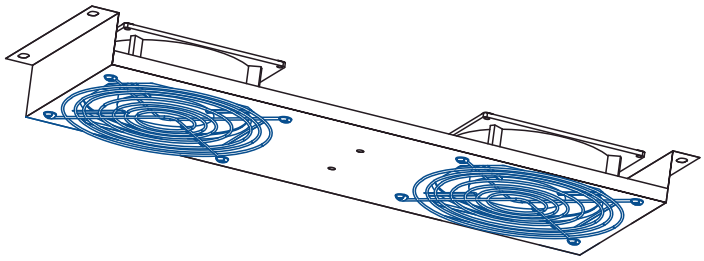

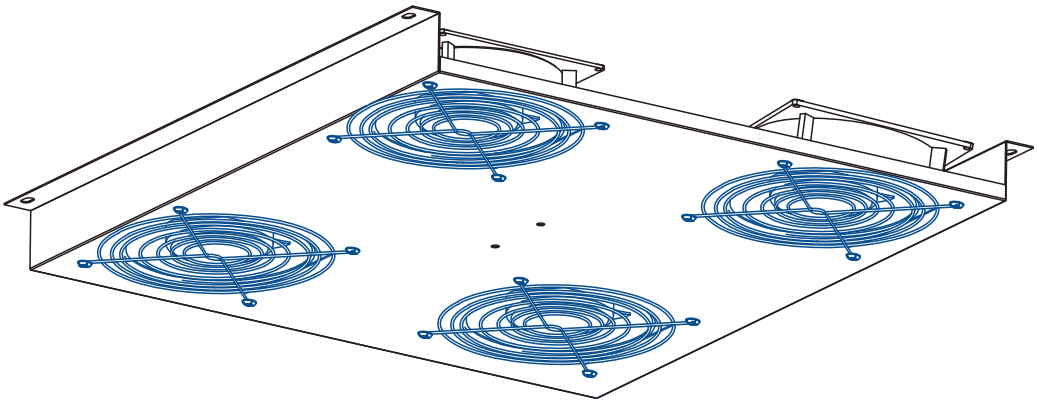

Model Matrix / Technical Data

Description	Part No.	Mounting	RU Space	CFM/No of Fans
Fan/90CFM	F-90CFM	Top panel	0	90/1
Fan Module/2Fan/Tower Mount/180CFM	FM-2F-TM-180CFM	Top panel	0	180/2
Fan Module/4Fan/Tower Mount/360CFM	FM-4F-TM-360CFM	Top panel	0	360/4

NETRACK ENCLOSURES
STORE | SECURE | STREAMLINE | SYSTEMISE

Tower Mount Fans Modules

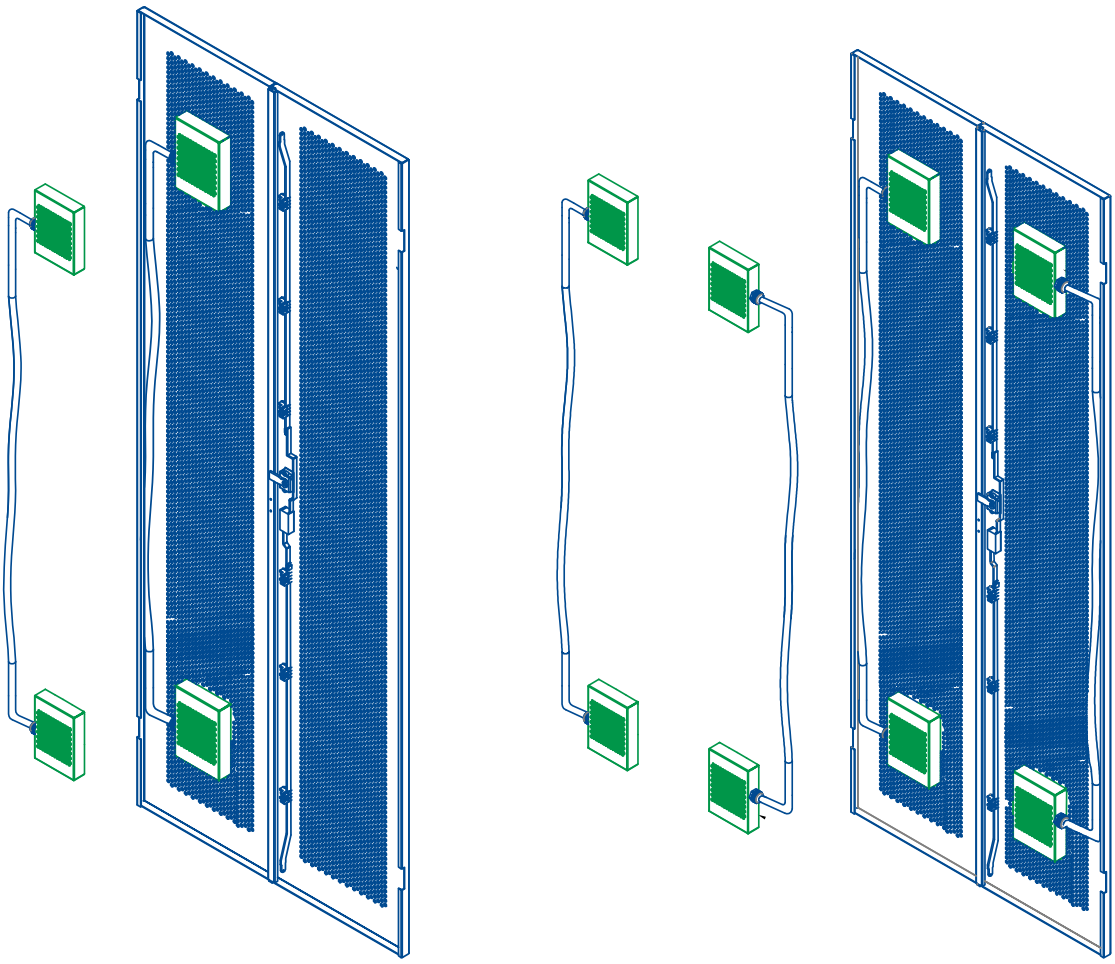

Model Matrix / Technical Data

Description	Part No.	Mounting	RU Space	CFM/No of Fans
Fan/90CFM	F-90CFM	Back Door/Side Panel	0	90/1
Fan Module/2Fan/Door Mount/180CFM	FM-2F-DM-180CFM	Back Door/Side Panel	0	180/2
Fan Module/4Fan/Door Mount/360CFM	FM-4F-DM-360CFM	Back Door/Side Panel	0	360/4

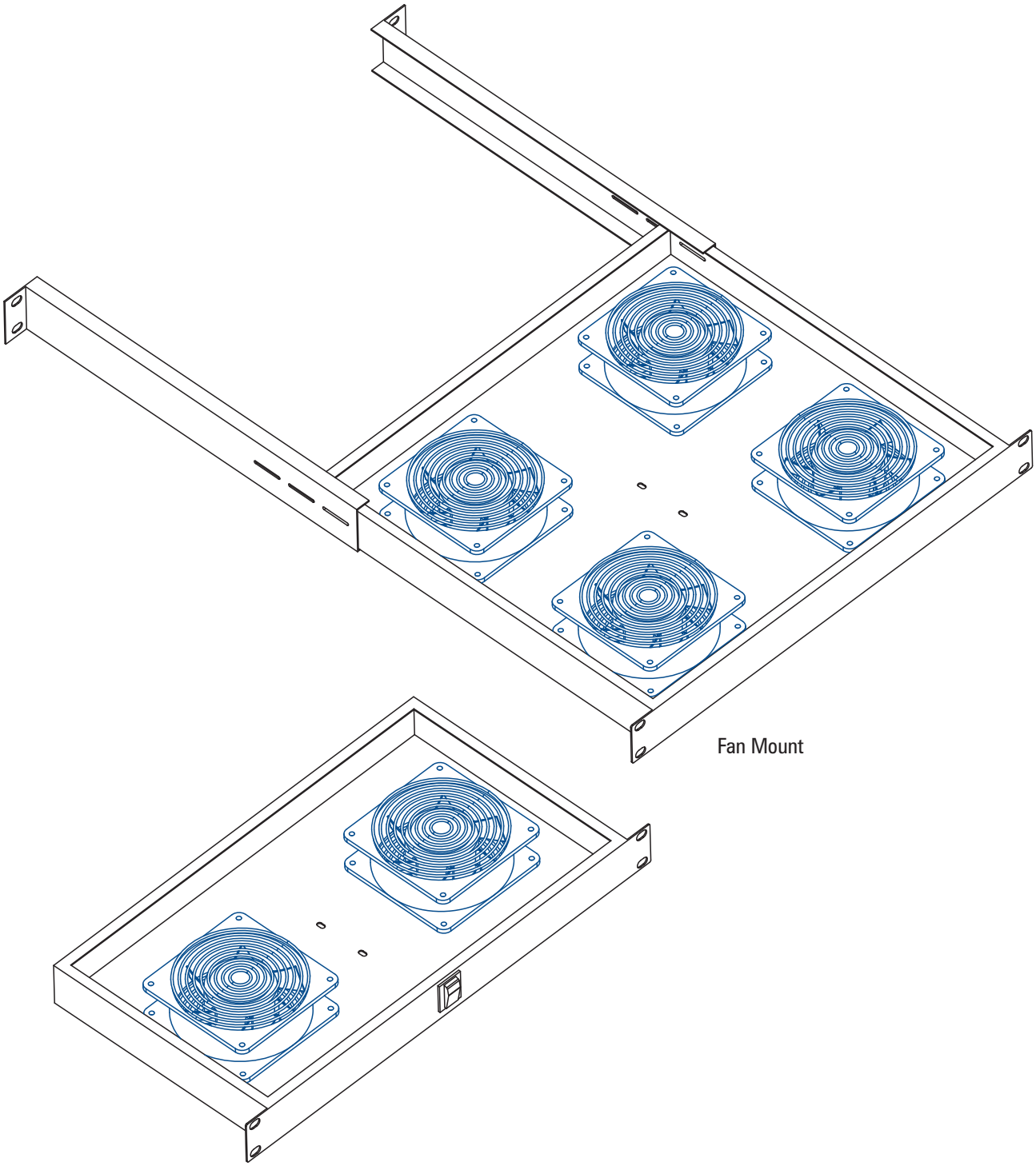

Model Matrix / Technical Data

Description	Part No.	Mounting	RU Space	CFM/No of Fans
Fan Module/2Fan/19"/180CFM	FM-2F-19-180CFM	19"	1	180/2
Fan Module/4Fan/19"/360CFM	FM-4F-19-360CFM	19"	1	360/4